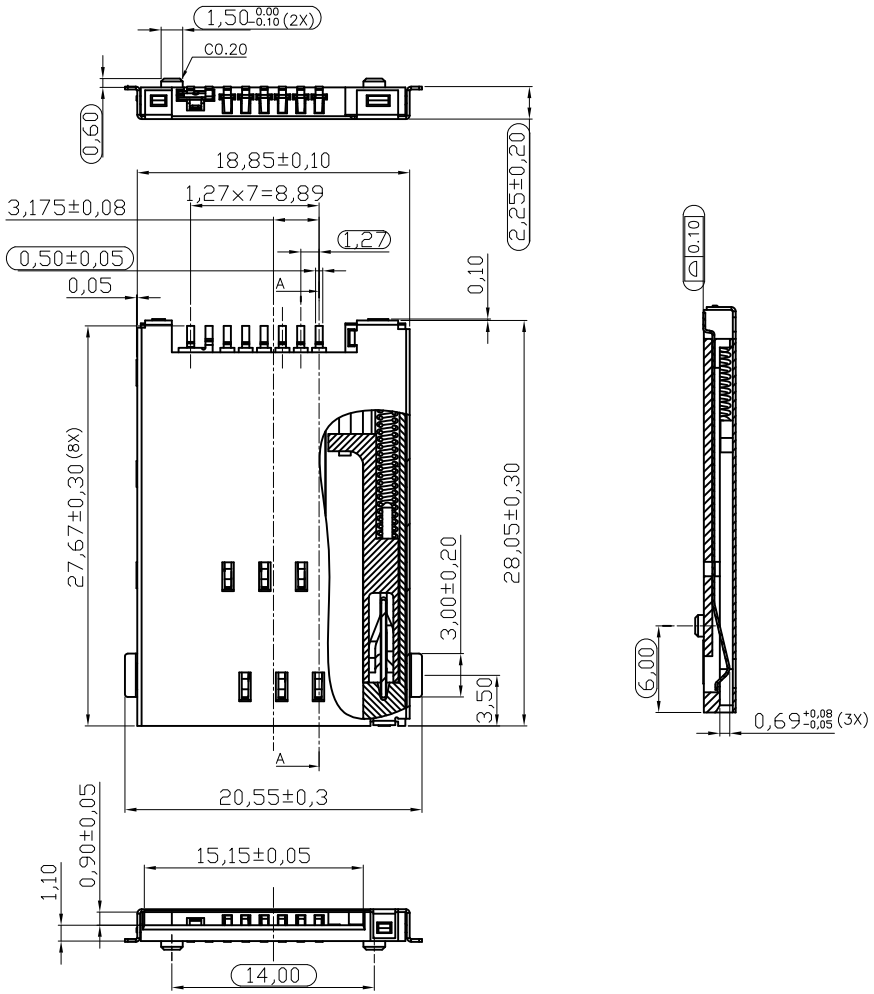

Material and Finish:

1.Insulator Material:L.C.P.+30% Glass Filled,UL94V-0,Color:Black
2.CAM Housing Material: Nylon-9T+30% Glass Filled,UL94V-0,Color:Black
3.Contact Material: Phosphor Bronze,C5191R-EH,t=0.15mm
4.Switch Terminal Material: Phosphor Bronze,C5191R-EH,t=0.15mm
5.Contact Area Plated:
A-SIM-08-06-C-003 :15u" Gold Plated Over 50" Nickel without peg
A-SIM-08-06-D-003 :30u" Gold Plated Over 50" Nickel without peg
A-SIM-08-06-C-113 :15u" Gold Plated Over 50" Nickel with peg
A-SIM-08-06-D-113 :30u" Gold Plated Over 50" Nickel with peg
6.Solder Area Plated: 100u" Tin Plated Over 50u" Nickel
7.Switch Terminal Contact Area Plated: 2u" Gold Plated Over 50u" Nickel
8.Switch Terminal Solder Area Plated: 100u" Tin Plated Over 50u" Nickel
9.Wire Spring: SUS304-WPB,Nickel Plated
10.Shell Material: Stainless Steel SUS 301,t=0.2mm
11.Shell Solder Area Plated: 2u" Selective Gold Plated For One Side
12.CAM Pin: SUS304-WPB,Nickel Plated
13.Current Rating: 0.5A AC/DC Max.
14.Contact Resistance: 100m ohms Max.
15.Insulation Resistance: 500M ohms Min.
16.Dielectric Withstanding Voltage: 250V AC/DC
17.Insertion Cycles: 5,000 Cycles Min.
18.Operation Teperature: -40°C to +85°C
19.Coad Detection Switch (NORMAL OPEN)
20.Packing: Tape & Reel

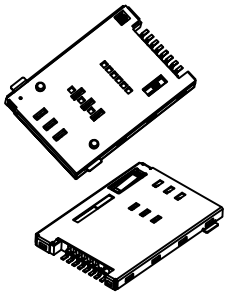

RoHS compliant

Scale	1:1						Date	Name
TOLERANCE						Drawn	04.04.2007	Storb
X.	±0.3					Approved	24.05.2010	Hellwig
X.X	±0.25							
X.XX	±0.20	③	Add new p/n	24.05.2010	Dean			
DIM	TOL	②	Update	06.08.2009	Dean			
Angle	±1°	①	Drawn	04.04.2007	Storb			
Angle	TOL	Id.	Modification	Date	Name			

ASSMANN WSW components

Customer-No.

ASSMANN WSW-No.
A-SIM-08-06-x-003
A-SIM-08-06-x-113

Drawing-No.
ASS 2196 CO

rev03

Replace

SHEET
1/3

SV270
SV239
SV395

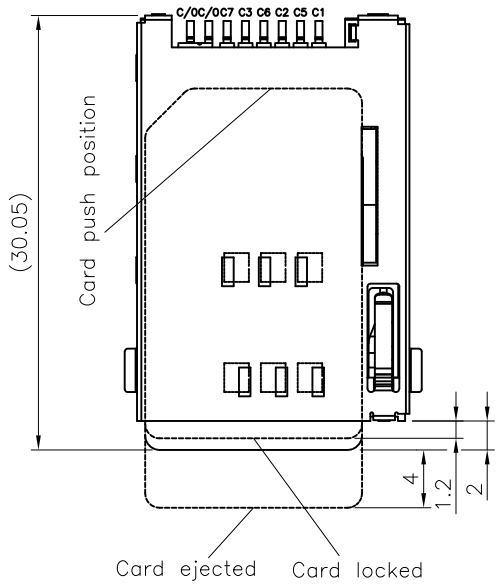

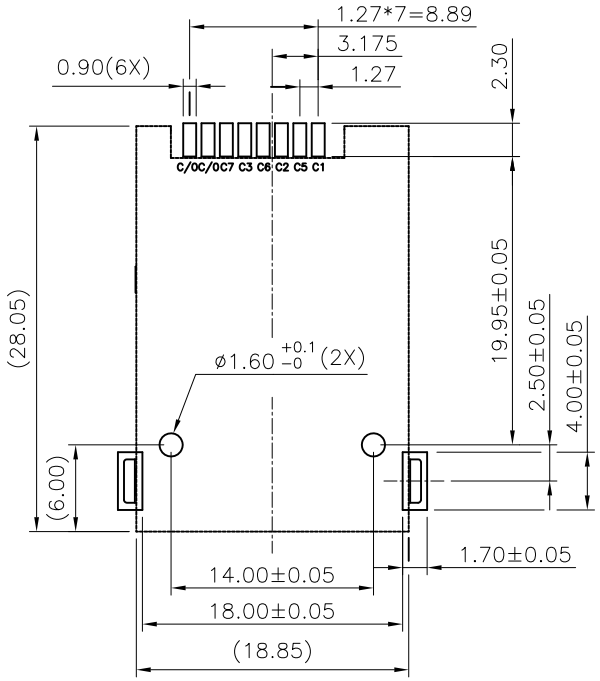

Recommanded P.C.B Layout
Tolerances: ±0.05mm

PIN NO.	PIN ASSIGNEMENT	PIN NO.	PIN ASSIGNEMENT
C1	VCC	C5	GND
C2	RST	C6	Not used for class A³ RFU for classes B and C
C3	CLK	C7	I/O

RoHS compliant

Scale	1:1						Date	Name
TOLERANCE						Drawn	04.04.2007	Storb
X.	±0.3					Approved	24.05.2010	Hellwig
X.X	±0.25							
X.XX	±0.20	③	Add new p/n	24.05.2010	Dean			
DIM	TOL	②	Update	06.08.2009	Dean			
Angle	±1°	①	Drawn	04.04.2007	Storb			
Angle	TOL	Id.	Modification	Date	Name			

ASSMANN WSW components

Customer-No.

ASSMANN WSW-No.
A-SIM-08-06-x-003
A-SIM-08-06-x-113

Drawing-No.
ASS 2196 CO

rev03

Replace

SHEET
2/3

SV270
SV239
SV395

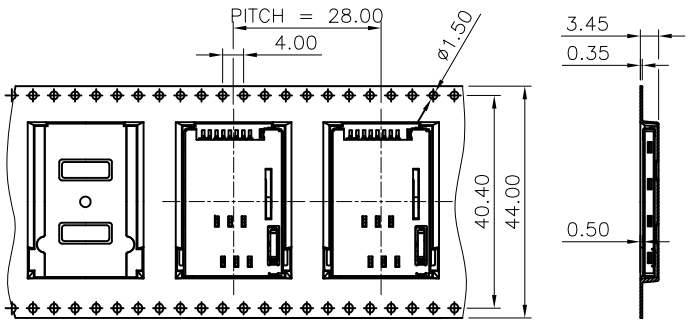

Material and Finish:
1.Material: PS
2.Packing: 700PCS/REEL,6 Reel/CARTON,4200PCS/CARTON
3.RO = RoHS
All Material in According With The RoHS Environment
Related Substances List Controlled.

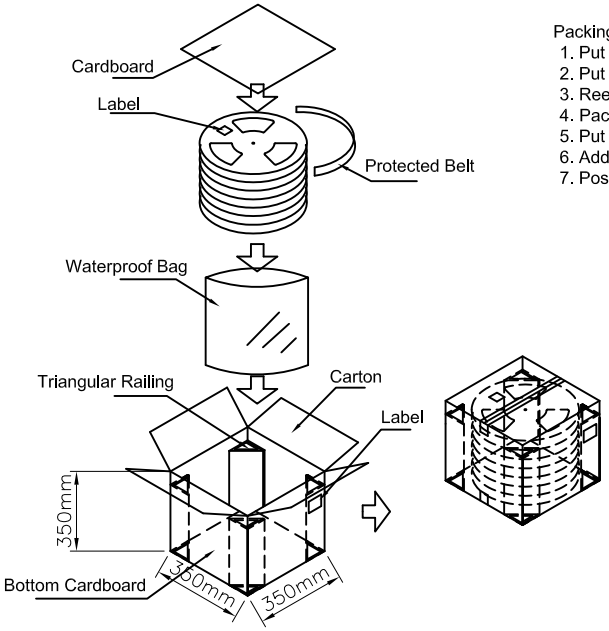

Packing specifiction
1. Put a bottom cardboard
2. Put triangular railing on four corners
3. Reel label upside
4. Pack REEL using waterproof bag
5. Put the reel into carton
6. Add a cardboard on the reel
7. Post a label on the outer carton

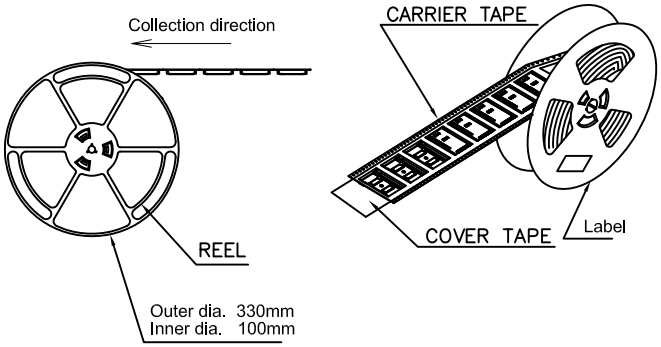

RoHS compliant

Scale	1:1						Date	Name	Customer-No.
TOLERANCE						Drawn	04.04.2007	Storb	
X.	±0.3					Approved	24.05.2010	Hellwig	ASSMANN WSW-No. A-SIM-08-06-x-003 A-SIM-08-06-x-113
X.X	±0.25								
X.XX	±0.20	③	Add new p/n	24.05.2010	Dean				Drawing-No.
DIM	TOL	②	Update	06.08.2009	Dean				ASS 2196 CO rev03
Angle	±1°	①	Drawn	04.04.2007	Storb				
									Replace SHEET 3/3
Angle	TOL	Id.	Modification	Date	Name				

ASSMANN WSW components

SV270
SV239
SV395