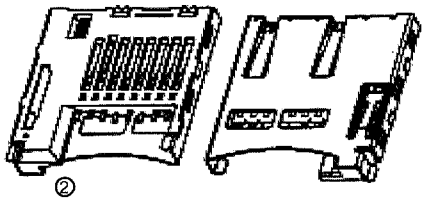

SPECIFICATION
MATERIAL
Insulator: High Thermal Plastic UL94V-0 Black
Contacts: Copper Alloy
Shell: Stainless Steel
CONTACT PLATING
Underplate: 50u"~100u" Nickel
Contact Area: 15u" Selective Gold
Solder Tails Area: 100u"~200u" Tin(Lead Free)
ELECTRICAL
Current Rating: 0.5 Amps (Max.)
Contact Resistance: 100 milli-ohm Max.
Insulation Resistance: 250 V DC or 300V AC for no less than 1 minute
MECHANICAL
Mating Cycles: 5000 Cycles
Insertion force: 2.0kgf Max.
Extraction force: 0.5kgf Min.
Temperature Range: -25°C To +85°C
Packing: Tape&Reel

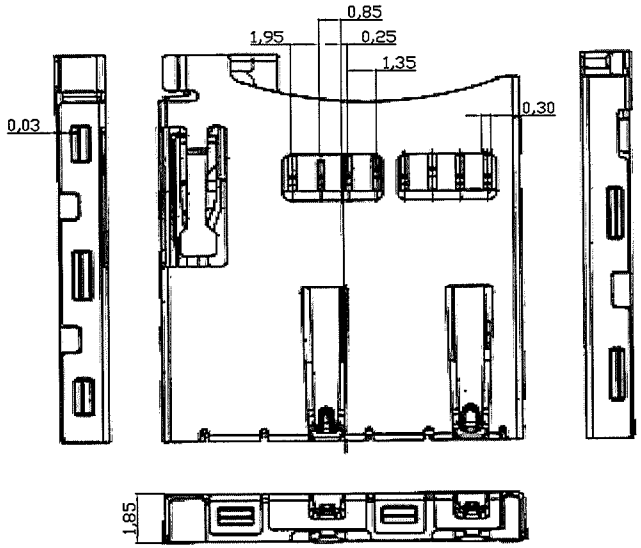

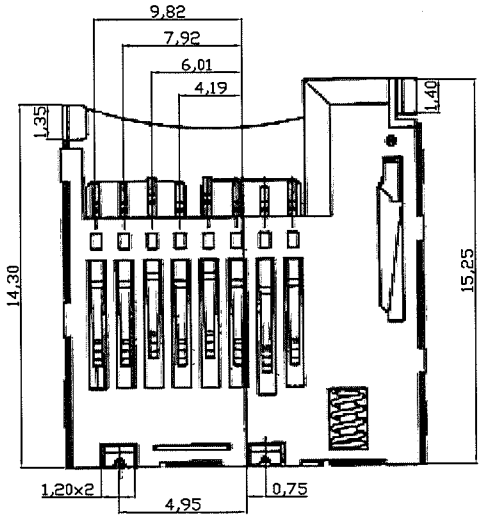

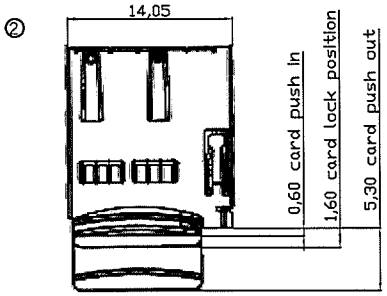

RoHS compliant
Unit: mm

Scale	Free						Date	Name
TOLERANCE						Drawn	24.06.2010	Dean
X.	±0.50					Approved	02.04.2013	Amy
X.X	±0.30							
X.XX	±0.20	②	Update	02.04.2013	Amy			
DIM	TOL	①	Redrawn	29.10.2012	Amy			
Angle	±5°	⓪	Drawn	24.06.2010	Dean			
Angle	TOL	Id.	Modification	Date	Name			

ASSMANN components

Customer-No.

ASSMANN WSW-No.
A-MSD-08-C-P013

Drawing-No.
ASS 4229 CO

rev02

Replace

SHEET
1 / 3

SV2975

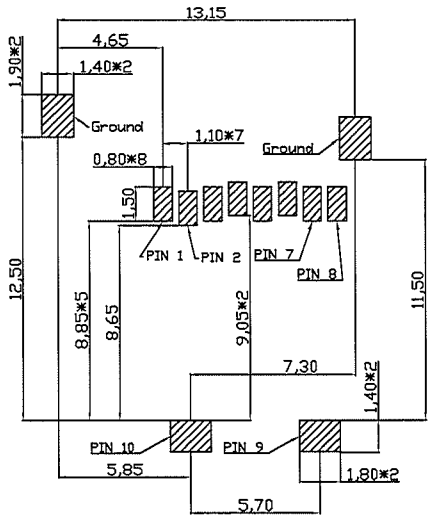

Recommended PCB Layout
(All tolerance are ±0.05)

Pin No.		Micro SD
Pin 1	DAT 2	1P
Pin 2	CD/DAT3	2P
Pin 3	GMD	3P
Pin 4	VDD	4P
Pin 5	CLK	5P
Pin 6	VSS	6P
Pin 7	DAT0	7P
Pin 8	DAT1	8P
Pin 9	CARD DETECT	
Pin 10		

Circuit:

Without Card | Card Inserted

RoHS compliant
Unit: mm

Scale	Free
TOLERANCE	
X.	±0.50
X.X	±0.30
X.XX	±0.20
DIM	TOL
Angle	±5°
Angle	TOL

Id.	Modification	Date	Name
2	Update	02.04.2013	Amy
1	Redrawn	29.10.2012	Amy
0	Drawn	24.06.2010	Dean

	Date	Name
Drawn	24.06.2010	Dean
Approved	02.04.2013	Amy

ASSMANN components

Customer-No.

ASSMANN WSW-No. A-MSD-08-C-P013

Drawing-No. ASS 4229 CO rev02

Replace

SHEET 2 / 3

SV2975

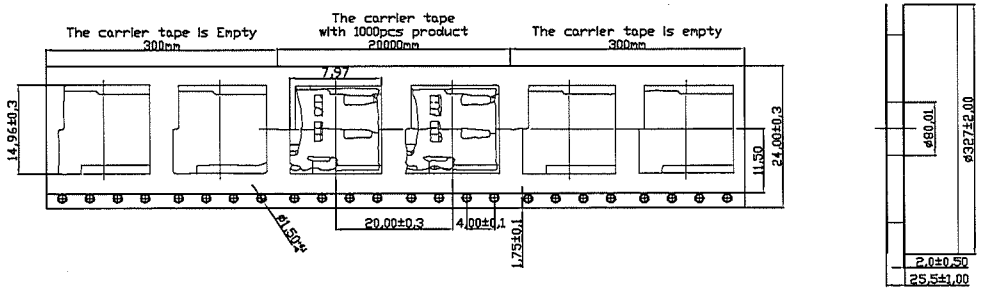

NOTE:
1. Part Conforms to EIA-481-C Standards.
2. All dimensions in millimeters
3. Marterial:Black Polystyrene.
4. Component load Per 13"Reel:1000PCS/21Meters.
5. All Material in According With The Rohs Environment Related Substances List Controlled.
6. 1000pcs/Reel, 11000pcs/Carton.

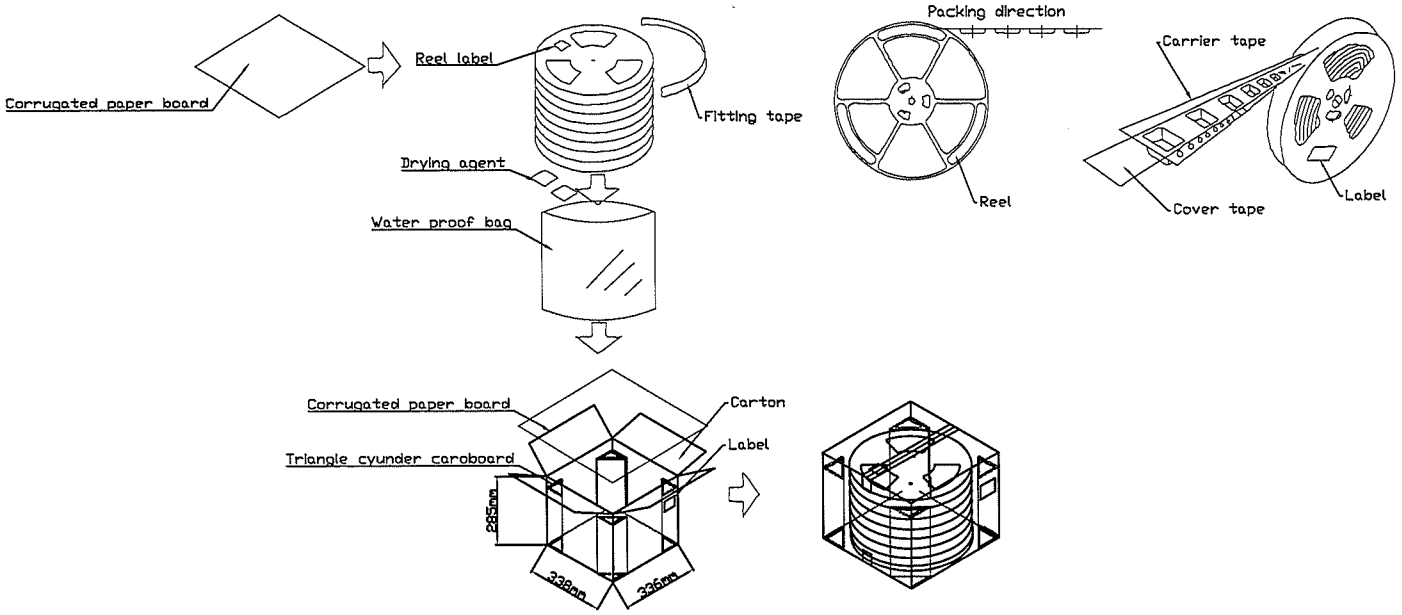

RoHS compliant
Unit: mm

Scale	Free
TOLERANCE	
X.	±2.00
X.X	±1.00
X.XX	±0.50
DIM	TOL
Angle	±5°
Angle	TOL

Id.	Modification	Date	Name
2	Update	02.04.2013	Amy
1	Redrawn	29.10.2012	Amy
0	Drawn	24.06.2010	Dean

	Date	Name
Drawn	24.06.2010	Dean
Approved	02.04.2013	Amy

ASSMANN components

Customer-No.

ASSMANN WSW-No. A-MSD-08-C-P013

Drawing-No. ASS 4229 CO rev02

Replace

SHEET 3 / 3

SV2975