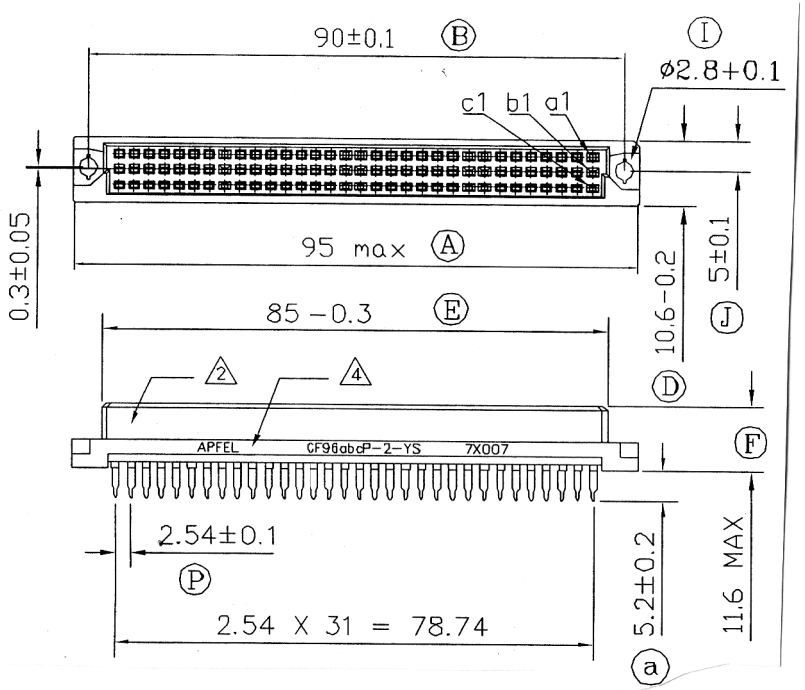

1. CONNECTOR MEETS REQUIREMENT OF DIN 41612
2. MATERIAL
   - -HOUSING: GLASS-FILLED PBT, COLOR GREY, UL 94V-0
   - -CONTACTS: PHOSPHOR BRONZE
3. CONTACT FINISH (OPTION IN PART NUMBER)
   - -1: 30u"(0.75um) GOLD PLATING ON MATING AREA, TIN PLATING ON TAIL AREA, FLASH GOLD PLATING ON NON-MATING AREA, NICKEL UNDERPLATE ALLOVER
   - -2: 15u"(0.38um) GOLD PLATING ON MATING AREA, TIN PLATING ON TAIL AREA FLASH GOLD PLATING ON NON-MATING AREA, NICKEL UNDERPLATE ALLOVER
   - BLANK: FLASH GOLD PLATING ON MATING AND NON-MATING AREA, TIN PLATING ON TAIL AREA, NICKEL UNDERPLATE ALLOVER
   - -YS: LEAD FREE PLATING PROCESS
4. CONNECTOR PRINTED WITH COMPANY NAME, PART NUMBER, AND BATCH NUMBER

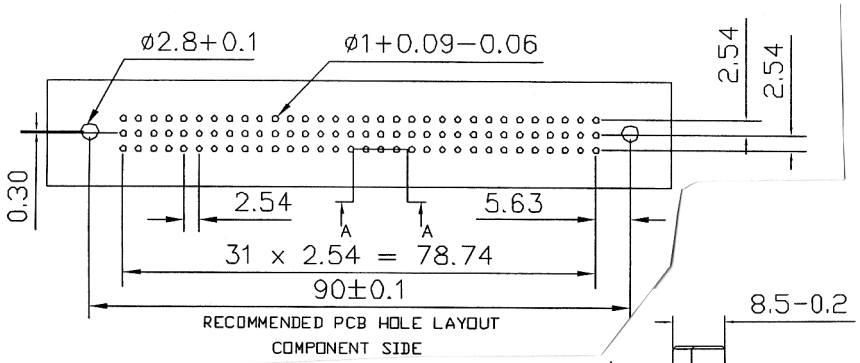

RECOMMENDED PCB HOLE LAYOUT
COMPONENT SIDE

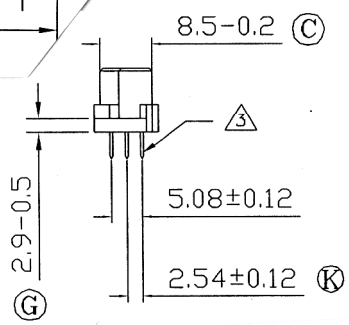

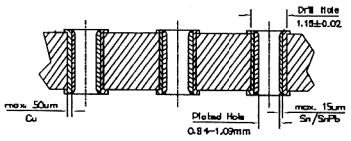

RECOMMENDED HOLE SPECIFICATIONS
SECTION A-A
SCALE 6 : 1

MILLIMETRE	
X.XXX	±0.012
X.XX	±0.05
X.X	±0.1
X	±0.25

Modification	Date	Name		Date	Name
			Drawn	03.05.06	Hellwig

ASSMANN
WSW Components

P/N
A-CFxxACP2
A-CFxxABCP2

Drawing-No. ASS 1964 CO

Sheet 1/1

Replace

Sheet