Remark.

Material and Construction are Subject to Change Without Advance Notice.
The Changes Should be Within Specification Listed in This Approved Sheet.
All the Fans Shall Meet the Inspection under Sampling Plan MIL-STD-105E,
The AQL are as Follow;

Critical	AQL=0.25%.
Major	AQL=1.00%.
Minor	AQL=2.50%.

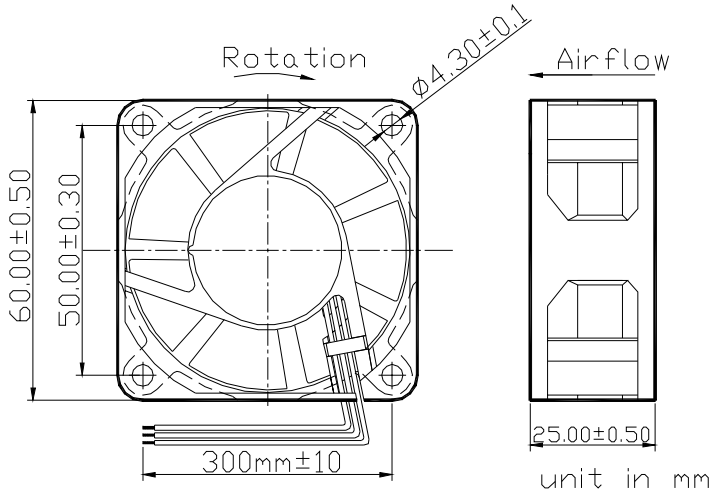

LEAD WIRES: UL 1007, AWG24, L=300+/-10MM
Red = positive ; Black = negative, yellow = FG

SPECIFICATIONS:

Safety Approval: UL, CUL, TUV, VDE, Mark
Measurements: 60 x 60 x 25mm.
Bearing Type: Ball.
Rated Voltage: 12.0 VDC.
Operating Voltage Range: 7 VDC - 13.2 V
Rated Current: 0.23 Amp.+10% MAX
Input Power: 2.76 Watt.+10% MAX
Rated Speed: 5200 RPM ±10%.
(In Free Air at Rated Voltage)
Air Flow: 29.3 CFM.(In Free Air at Rated Voltage)
Static Air Pressure: 0.248 Inch Water.
(In Free Air at Rated Voltage)
Noise Level: 40.5 dB/A.
Motor Protection: By Impedance.
Connection Lead Type: Wire, Awg #24.
Life Expenctancy: 75000 Hours at 30°C

MATERIAL

Frame: UL94V-0 Glass Filled Polyester(P.B.T)
Fan Blade: UL94V-0 Glass Filled Polyester(P.B.T)
Bearing Sys.: Two ball.
Lead Wire: UL 1007, 24AWG.

ELECTRICAL INSPECTION

Insulation Resistance:
Not less than 10M ohm between housing and positive end of lead wire(red) at 500V DC.

Dielectric Strength:
No damage should be found at 500 VAC for 60 seconds, measured with 5mA trip current between housing and positive end of lead wire.

Life Expectancy
The continous duty life at given temperature after which, 90% of testing units shall still be runing.

While the fan is runing, do not intentionally lock the fan for a long time since the overheating of the motor produced by the long-time locking will damage the fan.

Environmental

Improper use such as disassembling the fan, being covered with dust, or dipping the fan in water that results in defects is not covered in the warranty. Do not use the fan in the environment with corrosive air or liquid.

Operating Temperature/Humidity:
-10□□+70□ at humidity 65%+/-20% RH.

Storage Temperature: All function shall be normal after 500 hours storage at +40□ to +70□ with a 24 hour recovery periodat room temperature.

Humidity: After 96 hours, 95% RH, 40±2°per MIL-STD-202F,method103B Humidity test, The measured data of insulation resistance & dielectric strength should meet the specification.

Do not place or store the fan in the environment with high/low temperature/humidity. Do not store the fan for over 6 months; even if the fan is storad in room temperature for over 6 months, the fan may have the electric current leakage.

Id.	Modification	Date	Name
1	Zeichnung Neuanlage	09.11.07	N.Schulz

	Date	Name
Drawn	09.11.07	N.Schulz
Approved	09.11.07	C:Bendzin

ASSMANN
WSW Components

Customer - No.
60059

Assmann - No
VD0612HBAW

Drawing-No.
ASS 0660 HS

rev01

Replace

Sheet