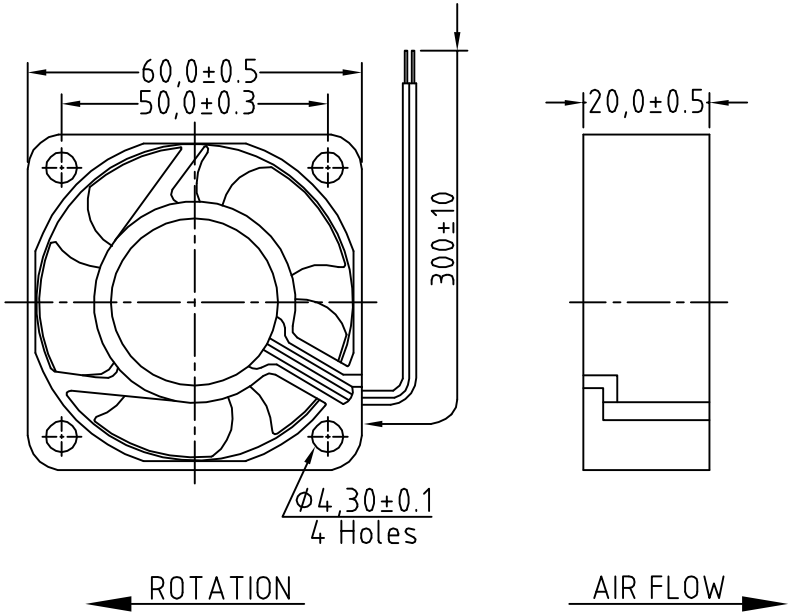

LEAD WIRES: UL 1007, AWG26, L=300+/-10MM
Red = positive ; Black = negative.

SPECIFICATIONS:

Safety Approval: UL, CUL, TUV.
Measurements: 60x60x20mm.
Bearing Type: two Ball.
Rated Voltage: DC 24V
Rated Current: 0,04 Amp
Input Power: 0,96 Watt.
Rated Speed: 3000 RPM ±10%.
(In Free Air at Rated Voltage)
Air Flow: 17 CFM.
Static Air Pressure: 2,4mm Water.
(In Free Air at Rated Voltage)
Noise Level: 26,0 dB/A.
Connection Lead Type: Wire, Awg #26.
Life Expenctancy: 80000 Hours at 40°C

MATERIAL

Frame: UL94V-0 Glass Filled Polyester(P.B.T)
Fan Blade: UL94V-0 Glass Filled Polyester(P.B.T)
Bearing Sys.: Two ball.
Lead Wire: UL 1007, 26AWG.

1.0 Motor Design
Reliable shaded-pole motor construction.
2.0 Insulation Resistance
10Megohms between internal stator and lead wire (+) at 500VDC
3.0 Dielectric Strength
5mA max at 500VAC 50Hz 1 second between frame and (+) terminal
4.0 Motor Protection
Impedence protected
5.0 Measured in an semi-anechoic chamber with background noise level below 17dBA. The fan is running in free air with microphone at a distance of one meter from the fan intake.
6.0 Air performance
Measured ba a double chamber. The value are recorded when the fan speed is stablized at rated voltage.
7.0 Tolerances
±15% on rated power and current

	Modification	Date	Name		Date	Name
				Drawn	13.02.08	N.Schulz
				Approved	13.02.08	C.Storb
1	Neu Anlage	13.02.08	N.Schulz			

ASSMANN
WSW Components

P/N
VD0624MSCW

Drawing-No.
ASS 0674 HS

Sheet
rev01

Replace

Sheet