A1RFRD10

REVISION RECORD				
REV	ECO	DESCRIPTION	DRFT	CHKD
1		設計,料號變更	JACK 12/04/00'	
2		倒角	JACK 4/24/01'	
3		設計變更	JACK 8/31/01'	
4		高度修改	JACK 10/08/01'	
5		增加尺寸標註	JACK 1/17/02'	
6		NOTES MODIFY	CHI 09/28/02'	
7		DEL DIMENSION	CHI 11/17/03'	

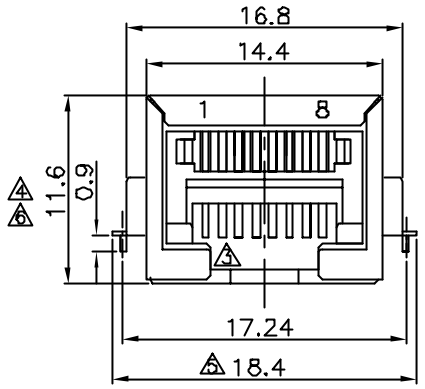

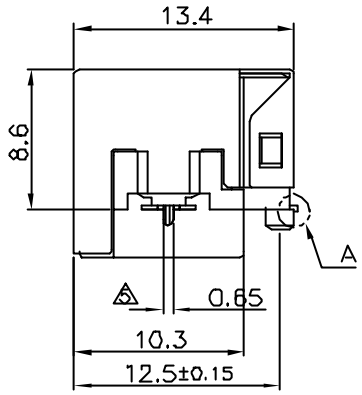

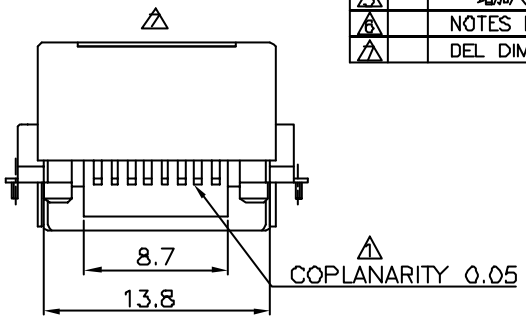

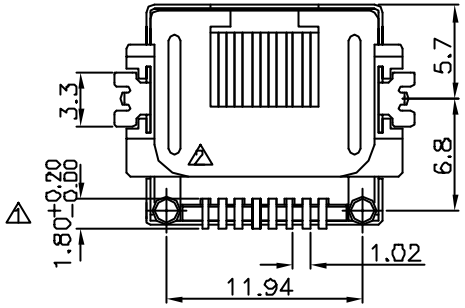

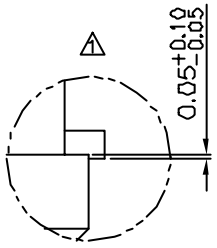

SEE"A"

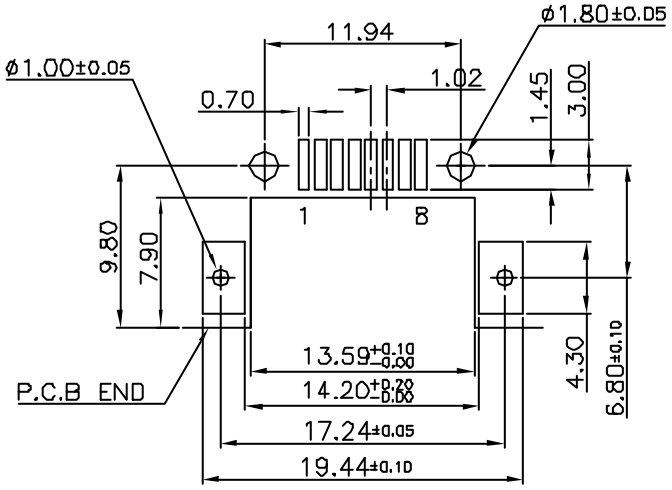

P.C.B LAYOUT(TOP VIEW)

NOTES:

ELECTRICAL:

1. VOLTAGE RATING : 125 VAC RMS.
2. CURRENT RATING : 1.5 AMP.
3. CONTACT RESISTANCE : 35 MILLIOHMS MAX.
4. INSULATION RESISTANCE: 1000 MEGOHMS MIN @ 500 VDC.
5. DIELECTRIC STRENGTH : 1000 VAC RMS 60Hz, 1MIN.

MECHANICAL:

1. SHIELD MATERIAL : BRASS, t=0.25mm.
1. HOUSING MATERIAL : NYLON FR52(HIGH TEMPERTURE) UL94V-0
2. CONTACT MATERIAL : PHOSPHOR BRONZE t=0.35mm.
3. PLATING : 1: CONTACT AREA- SELECTIVE GOLD PLATING.
   2: TAILS- 150u" TIN-LEAD MIN OVER 50u" NICKEL.
4. OPERATING LIFE : 750 CYCLES MIN.
6. 5. PCB RETENTION POST-SOLDER: 10 LBS MIN.

ENVIRONMENTAL:

1. STORAGE : -40°C TO +85°C.
2. OPERATION: -40°C TO +85°C.

MATES WITH MODULAR PLUG CONFORMING TO FCC PART 68, SUBPART F.

PART NUMBER: E668X-1X021X

NO.OF CONTACTS
- 2-2C
- 4-4C
- 6-6C
- 8-8C

PLATING: 1-3u" 4-30u"
2-6u" 5-50u"
3-15u"

SHIELD:
- 1-FULL AHIELD, TIN PLATED
- 7 2-FULL SHIELD, NICKEL PLATED

MM (INCH)	DFTD JACK	DATE 8/14/00'	FULL RISE ELECTRONIC CO., LTD
TOLERANCES EXCEPT AS NOTED	CHKD SHENG	DATE 11/17/03'	
MM .0 ±0.2 ± .00 ±0.12 ± .000 ±0.05 ±	MFG LIU	DATE 11/17/03'	TITLE PHONE JACK RJ45 SMD
	APPVL YUAN	DATE 11/17/03'	
ANGLES ± 0.5	MATERIAL :		
	QT'Y :		DRAWING NO. GE663A05 SIZE A3 REV 7
THIRD ANGLE PROJECTION	FINISH :		/PART NO. SEE NOTE
DETACHED LISTS	SCALE :		DO NOT SCALE DRAWING SHEET 1 OF 1