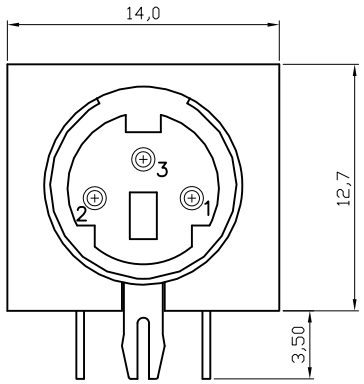


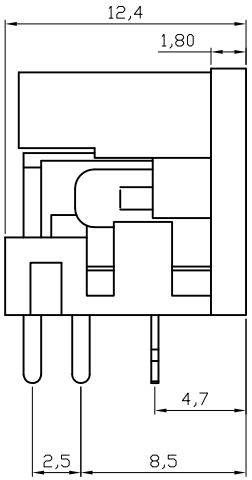


1.Material:
Contacts :Brass
Housing: PBT+30% G.F. UL 94V-0;Black

2.Electrical:
Current-max[amps] 0.3AMP DC30V
Withstanding Voltage 1000V AC MIN.
Contact Resistance [ohms] 30 milliohms max
Insulation Resistance [ohms] 100 Megohms min

3.Plating:
Contacts: Full gold flash

4.Environmental
Temperature Range -25°C~+85°C

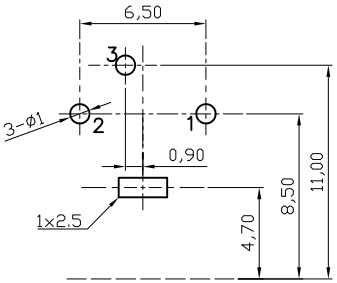


Recommended PCB Layout
Top View Tolerance(±0,05)

**RoHS compliant**

| | | | | | | | | | |
|---|---|---|---|---|---|---|---|---|---|
| Scale | 1:1 | | | | | | Date | Name | Customer-No. |
| TOLERANCE | | | | | | Drawn | 13.03.2008 | N.Schulz | |
| X.X | ±0.38 | | | | | Approved | 25.11.2010 | Gerber | ASSMANN WSW-No. A-DIO-M03 |
| X.XX | ±0.25 | | | | | | | | |
| X.XXX | ±0.15 | ③ | Change the manufacture plant | 25.11.2010 | Alex | | | | Drawing-No. ASS 2542 CO rev03 |
| DIM | TOL | ② | Update | 15.07.2009 | Rale | | | | |
| X.° | ±1° | ① | Drawn | 13.03.2008 | N.Schulz | | | | |
| X.X° | ±X° | | | | | | | | Replace / Sheet |
| Angle | TOL | Id. | Modification | Date | Name | | | | |

ASSMANN WSW components