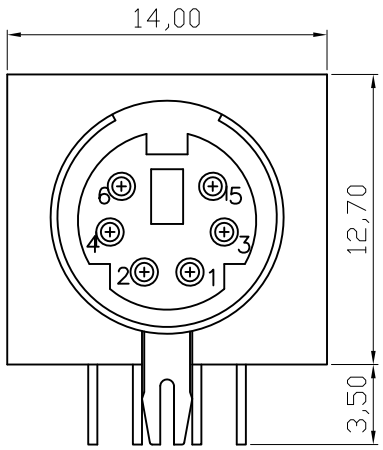

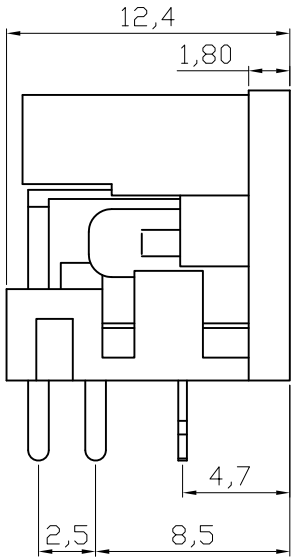

1.Material:
Contacts :Brass
Housing: PBT+30% G.F. UL 94V-0;Black

2.Electrical:
Current-max[amps] 0.3AMP DC30V
Withstanding Voltage 1000V AC MIN.
Contact Resistance [ohms] 30 milliohms max
Insulation Resistance [ohms] 100 Megohms min

3.Plating:
Contacts: Full gold flash

4.Environmental
Temperature Range -25°C~+85°C

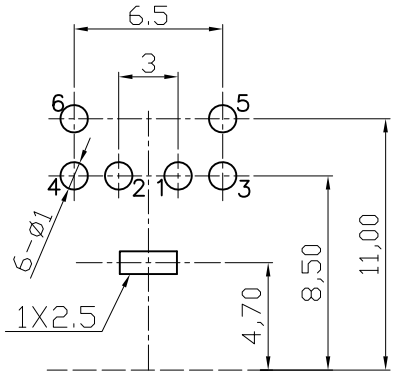

Recommended PCB Layout
Top View Tolerance(±0,05)

RoHS compliant

Scale	1:1
TOLERANCE	
X.X	±0.38
X.XX	±0.25
X.XXX	±0.15
DIM	TOL
X.°	±1°
X.X°	±X°
Angle	TOL

Id.	Modification	Date	Name
②	Change the manufacture plant	25.11.2010	Alex
①	Drawn	15.07.2009	Rale

	Date	Name
Drawn	15.07.2009	Rale
Approved	25.11.2010	Gerber

ASSMANN WSW components

Customer-No.

ASSMANN WSW-No.
A-DIO-M06

Drawing-No.
ASS 1038 CO

rev02

Replace

Sheet