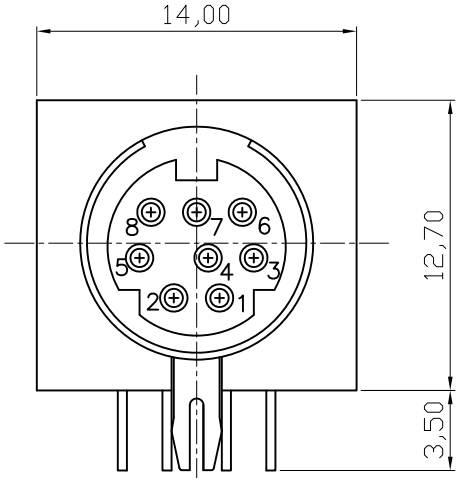

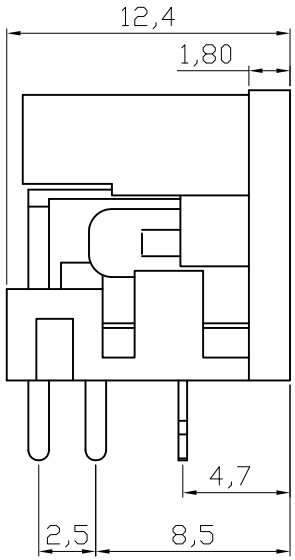

1.Material:
Contacts :Brass
Housing: PBT+30% G.F. UL 94V-0;Black

2.Electrical:
Current-max[amps] 0.3AMP DC30V
Withstanding Voltage 1000V AC MIN.
Contact Resistance [ohms] 30 milliohms max
Insulation Resistance [ohms] 100 Megohms min

3.Plating:
Contacts: Full gold flash

4.Environmental
Temperature Range -25°C~+85°C

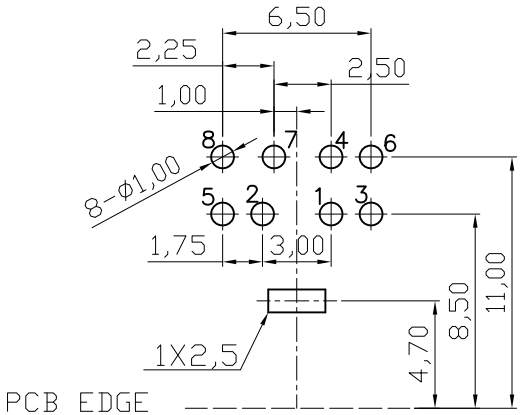

Recommended PCB Layout
Top View Tolerance(±0,05)

RoHS compliant

Scale	1:1					Date	Name	Customer-No.
TOLERANCE					Drawn	06.12.2006	Hellwig	
X.X	±0.38	④	Modify the PCB layout	21.04.2011	Rale	Approved	21.04.2011	Hellwig
X.XX	±0.25	③	Change the manufacture plant	25.11.2010	Alex			
X.XXX	±0.15	②	Update	15.07.2009	Rale			
DIM	TOL	①	Drawn	06.12.2006	Hellwig			
X.°	±1°							
X.X°	±X°							
Angle	TOL	Id.	Modification	Date	Name			

ASSMANN WSW components

ASSMANN WSW-No.
A-DIO-M08

Drawing-No.
ASS 1012 CO

rev04

Replace

Sheet